POWERCOM

Hobart Town Hall Layout

Approved - Planning Only
NOT FOR CONSTRUCTION

88 x 290W Solar Modules, Installed on tilt frames, facing North East

Powercom Group Pty Ltd
www.powercomgroup.com
info@powercomgroup.com

72 Browns Road, Kingston
TAS. AUSTRALIA 7050
Tel: +613 6229 7966
Fax: +613 6229 9245

POWERCOM

Approved - Planning Only
NOT FOR CONSTRUCTION

15 Degree Tilt, rear height of array is less than 0.5M.

Powercom Group Pty Ltd
www.powercomgroup.com
info@powercomgroup.com

72 Browns Road, Kingston
TAS. AUSTRALIA 7050
Tel: +613 6229 7966
Fax: +613 6229 9245

POWERCOM

Approved - Planning Only
NOT FOR CONSTRUCTION

RESULT OF SEARCH

RECORDER OF TITLES

Issued Pursuant to the Land Titles Act 1980

Approved - Planning Only
NOT FOR CONSTRUCTION

SEARCH OF TORRENS TITLE

VOLUME	FOLIO
142916	1
EDITION	**DATE OF ISSUE**
1	21-Dec-2004

SEARCH DATE : 09-Jan-2017
SEARCH TIME : 09.25 AM

DESCRIPTION OF LAND

City of HOBART
Lot 1 on Plan 142916
Derivation : Whole of 1A-0R-39P GTD to the Mayor, Aldermen and Citizens of the City of Hobart
Derived from A18798

SCHEDULE 1

HOBART CITY COUNCIL

SCHEDULE 2

Reservations and conditions in the Crown Grant if any

UNREGISTERED DEALINGS AND NOTATIONS

No unregistered dealings or other notations

Approved - Planning Only
NOT FOR CONSTRUCTION

OWNER LAND TITLES ACT 1980 FOLIO REFERENCE A18798 GRANTEE WHOLE OF 1A-0R-39P GTD TO THE MAYOR, ALDERMEN AND CITIZENS OF THE CITY OF HOBART	PLAN OF TITLE LOCATION CITY OF HOBART FIRST SURVEY PLAN No. P69 HOBART L.O. COMPILED BY LDRB SCALE 1: 1000 LENGTHS IN METRES	Registered Number P.142916 APPROVED 15 DEC 2004 Alice Kawa Recorder of Titles

MAPSHEET MUNICIPAL CODE No. 114 (5225-52)	LAST UPI No 2100688	LAST PLAN No.	ALL EXISTING SURVEY NUMBERS TO BE CROSS REFERENCED ON THIS PLAN

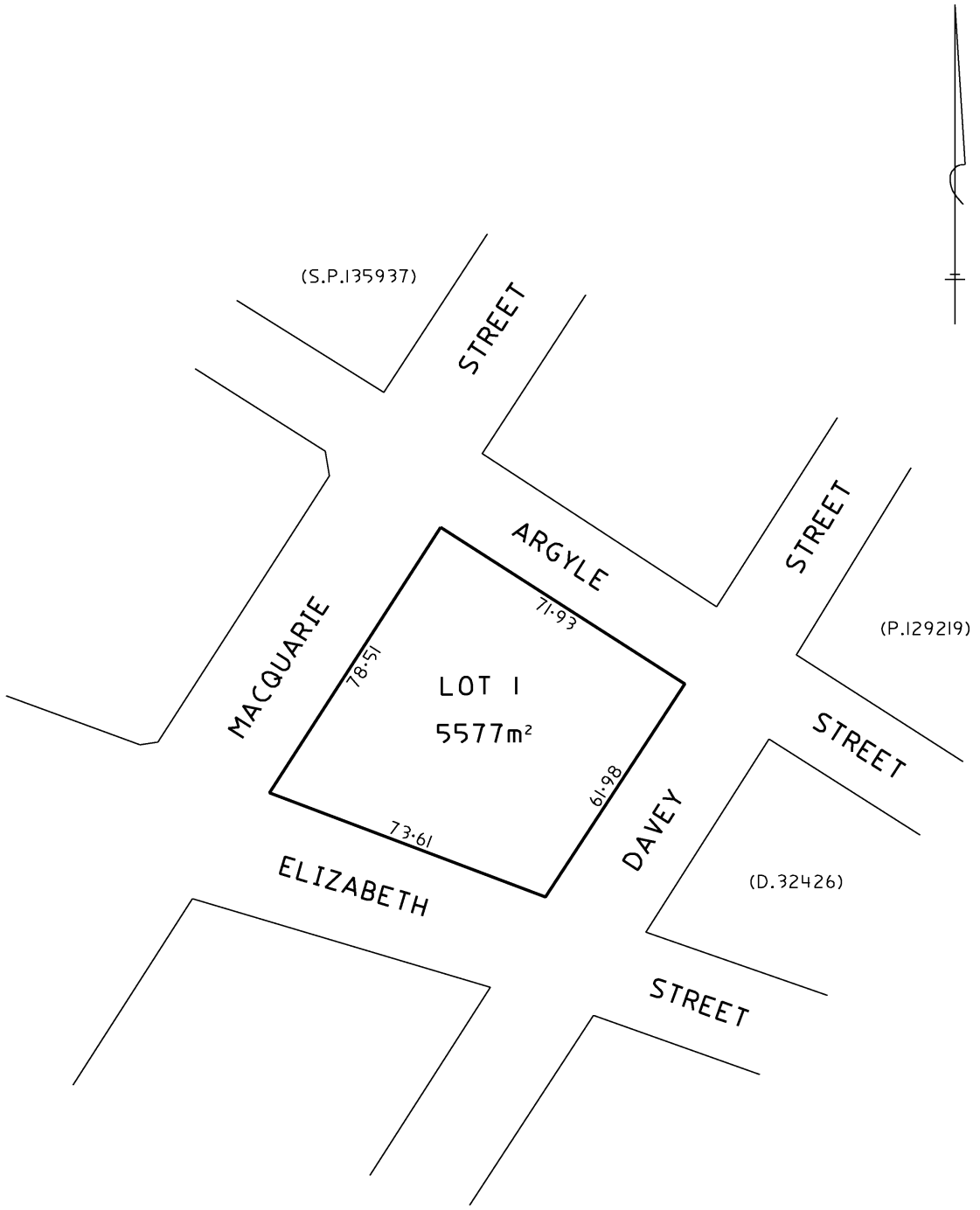

Approved - Planning Only
NOT FOR CONSTRUCTION

Tasmanian Heritage Council

Tasmanian Heritage Council
GPO Box 618 Hobart Tasmania 7000
103 Macquarie St, Hobart Tasmania 7000
Tel: 1300 850 332
enquiries@heritage.tas.gov.au
www.heritage.tas.gov.au

PLANNING REF:	n/a
EXEMPTION NO:	1303
REGISTERED PLACE NO:	2466
FILE NO:	06-27-06 THC
APPLICANT:	Powercom Solar
DATE:	23 December 2016

CERTIFICATE OF EXEMPTION

(*Historic Cultural Heritage Act 1995*)

The Place: Town Hall, Road, 50 Macquarie Street, Hobart.

Thank you for your application for a Certificate of Exemption for works to the above place.

Your application has been approved by the Heritage Council under section 42(3)(a) of the *Historic Cultural Heritage Act 1995* for the following works:

Works: Installation of solar panels to the roof of the modern annex of the town hall.

Documents: Details of the solar array layout prepared by Powercom (3 pages).
Structural design documentation prepared by Gamcorp (job no. 23939, dated 04/09/2012).

Comments: The array is to be installed on the modern annex to the heritage building and will not have little/no visual impact on the registered place.

A copy of this certificate will be forwarded to the local planning authority for their information. A planning, building or plumbing permit from the local planning authority may be required for the works. Further advice regarding these requirements should be obtained from the local council or planning authority.

Further information on the types of work that may be eligible for a Certificate of Exemption is available in the Tasmanian Heritage Council's *Works Guidelines*. The *Guidelines* can be downloaded from www.heritage.tas.gov.au

Please contact Russell Dobie on 1300 850 332 if you require further clarification of any details contained in this certificate.

Russell Dobie
Regional Heritage Advisor – Heritage Tasmania
Under delegation of the Tasmanian Heritage Council

Approved - Planning Only
NOT FOR CONSTRUCTION

gamcorp
innovation in design and construction

Gamcorp (Melbourne) Pty Ltd
Consulting Structural & Civil Engineers
A.C.N 141 076 904
A.B.N 73 015 060 240

www.gamcorp.com.au
melbourne@gamcorp.com.au

1/19 Anthony Drive, Mount Waverley VIC 3149. Tel: 03 9803 9533 Fax: 03 9802 9125

Structural Design Documentation

PV-eZRack® SolarRoof Interface spacing Table According to AS 1170.2011 for all wind region All around Australia

For:

Clenergy Australia

Job Number: 23939
Date: 4 September 2012

QAS INTERNATIONAL
ISO 9001:2008
REGISTERED FIRM
Certificate No. AU1222

COPYRIGHT: The concepts and information contained in this document are the property of Gamcorp (Melbourne) Pty Ltd. Use or copying of this document in whole or in part without the written permission of Gamcorp constitutes an infringement of copyright.

LIMITATION: This report has been prepared on behalf of and for the exclusive use of Gamcorp (Melbourne) Pty Ltd's Client, and is subject to and issued in connection with the provisions of the agreement between Gamcorp (Melbourne) Pty Ltd and its Client. Gamcorp (Melbourne) Pty Ltd accepts no liability or responsibility whatsoever for or in respect of any use of or reliance upon this report by any third party.

Approved - Planning Only
NOT FOR CONSTRUCTION

gamcorp
innovation in design and construction

1/19 Anthony Drive
Mount Waverley VIC 3149
Tel: 03 9803 9533
Fax: 03 9802 9125
melbourne@gamcorp.com.au
www.gamcorp.com.au

ISO 9001:2008 Registered Firm
Certificate No: AU1222

Job No: **23939**

Client: **Clenergy Australia**

Project: **PV-eZRack® SolarRoof Interface spacing Table**

Address: **According to AS 1170.2011 for all wind region**

Australian Standards

AS 1170. 2011 – Structural Design Actions
Part 0 – General Principles
Part 1 – Permanent imposed and other actions
Part 2 – Wind Actions
Part 3 – Snow and Ice Actions
AS 1252 – High Strength Structural Bolting
AS 3600 – Concrete Structures
AS 4055 – Wind Loads for Housing
AS 4100 – Steel Structures
AS 4600 – Cold-Formed Steel Structures

Wind Terrain Category: WTC 2

Designed: **M.S**

Date: **Sep-12**

Approved - Planning Only
NOT FOR CONSTRUCTION

gamcorp
innovation in design and construction

Client: **Clenergy Australia** Job: **23939**
Project: **PV-eZRack® SolarRoof Interface spacing Table** Date: **Sep-12**
Address: **All around Australia**
Designed: **M.S** REV G

PV-eZRack® SolarRoof Interface spacing Table for Tile Roof

Type of Rail ER-R
Type of Interface ER-I-01
Solar Panel Dimension 2mx1m
Terrain category 2

Roof Angle (Φ) – 20° - 25°

Wind Region	Building Height – H (m)										
	H≤5			5<H≤10			10<H≤15			15<H≤20	
	Edge	**Middle**		**Edge**	**Middle**		**Edge**	**Middle**		**Edge**	**Middle**
A	**1775**	**1875**		**1700**	**1825**		**1575**	**1775**		**1500**	**1775**
B	**1550**	**1850**		**1325**	**1725**		**1200**	**1600**		**1150**	**1525**
C	**1100**	**1450**		**925**	**1250**		**850**	**1150**		**800**	**1075**
D	**750**	**1025**		**625**	**850**		**575**	**775**		**550**	**750**

Roof Angle (Φ) – 25° - 30°

Wind Region	Building Height – H (m)										
	H≤5			5<H≤10			10<H≤15			15<H≤20	
	Edge	**Middle**		**Edge**	**Middle**		**Edge**	**Middle**		**Edge**	**Middle**
A	**1550**	**1800**		**1325**	**1750**		**1200**	**1725**		**1150**	**1650**
B	**1175**	**1675**		**1000**	**1450**		**925**	**1325**		**875**	**1275**
C	**825**	**1200**		**700**	**1025**		**625**	**925**		**600**	**875**
D	**550**	**825**		**475**	**700**		**425**	**625**		**400**	**600**

Roof Angle (Φ) – ≥ 30°

Wind Region	Building Height – H (m)										
	H≤5			5<H≤10			10<H≤15			15<H≤20	
	Edge	**Middle**		**Edge**	**Middle**		**Edge**	**Middle**		**Edge**	**Middle**
A	**1325**	**1775**		**1125**	**1675**		**1025**	**1550**		**975**	**1475**
B	**1000**	**1500**		**850**	**1275**		**775**	**1175**		**750**	**1125**
C	**700**	**1050**		**575**	**900**		**525**	**825**		**500**	**775**
D	**475**	**725**		**400**	**600**		**350**	**550**		**350**	**525**

Approved - Planning Only
NOT FOR CONSTRUCTION

gamcorp
innovation in design and construction

Client: **Clenergy Australia** Job: **23939**
Project: **PV-eZRack® SolarRoof Interface spacing Table** Date: **Sep-12**
Address: **All around Australia**
Designed: **M.S** REV G

PV-eZRack® SolarRoof Interface spacing Table for Tin Roof

Type of Rail ER-R
Type of Interface ER-I-05
Solar Panel Dimension 2mx1m
Terrain category 2

Roof Angle (Φ) – ≤10°

Wind Region	Building Height – H (m)										
	H≤5			5<H≤10			10<H≤15			15<H≤20	
	Edge	**Middle**		**Edge**	**Middle**		**Edge**	**Middle**		**Edge**	**Middle**
A	**1575**	**2000**		**1500**	**1850**		**1450**	**1800**		**1425**	**1775**
B	**1550**	**1950**		**1475**	**1825**		**1425**	**1775**		**1400**	**1725**
C	**1425**	**1750**		**1350**	**1650**		**1300**	**1600**		**1250**	**1575**
D	**1200**	**1600**		**1100**	**1525**		**1025**	**1475**		**1000**	**1450**

Roof Angle (Φ) – 10° - 20°

Wind Region	Building Height – H (m)										
	H≤5			5<H≤10			10<H≤15			15<H≤20	
	Edge	**Middle**		**Edge**	**Middle**		**Edge**	**Middle**		**Edge**	**Middle**
A	**1725**	**2225**		**1625**	**2075**		**1575**	**2000**		**1550**	**1950**
B	**1700**	**2175**		**1600**	**2025**		**1575**	**1950**		**1525**	**1925**
C	**1550**	**1925**		**1450**	**1800**		**1425**	**1750**		**1400**	**1700**
D	**1400**	**1750**		**1275**	**1650**		**1200**	**1600**		**1175**	**1575**

Roof Angle (Φ) – 20° - 30°

Wind Region	Building Height – H (m)										
	H≤5			5<H≤10			10<H≤15			15<H≤20	
	Edge	**Middle**		**Edge**	**Middle**		**Edge**	**Middle**		**Edge**	**Middle**
A	**1675**	**1800**		**1600**	**1750**		**1575**	**1725**		**1550**	**1700**
B	**1650**	**1800**		**1600**	**1725**		**1550**	**1700**		**1550**	**1675**
C	**1550**	**1675**		**1475**	**1625**		**1450**	**1575**		**1425**	**1575**
D	**1450**	**1600**		**1400**	**1525**		**1350**	**1500**		**1325**	**1475**

Approved - Planning Only
NOT FOR CONSTRUCTION

gamcorp
innovation in design and construction

Client: **Clenergy Australia** Job: **23939**
Project: **PV-eZRack® SolarRoof Interface spacing Table** Date: **Sep-12**
Address: **All around Australia**
Designed: **M.S** REV G

PV-eZRack® SolarRoof Frame spacing Table for Adjustable Tilt Leg

Type of Rail ER-R
Solar Panel Dimension 2mx1m
Terrain category 2

Type of Interface 10°-15° Adjustable Tilt Leg
Roof Angle (Φ) – ≤10°

Wind Region	Building Height – H (m)										
	H≤5			5<H≤10			10<H≤15			15<H≤20	
	Edge	**Middle**		**Edge**	**Middle**		**Edge**	**Middle**		**Edge**	**Middle**
A	**1500**	**1725**		**1400**	**1600**		**1350**	**1550**		**1325**	**1525**
B	**1325**	**1675**		**1200**	**1525**		**1125**	**1425**		**1100**	**1375**
C	**1075**	**1325**		**950**	**1200**		**900**	**1125**		**875**	**1100**
D	**850**	**1050**		**775**	**950**		**725**	**900**		**700**	**875**

Type of Interface 15°-30° Adjustable Tilt Leg
Roof Angle (Φ) – ≤10°

Wind Region	Building Height – H (m)										
	H≤5			5<H≤10			10<H≤15			15<H≤20	
	Edge	**Middle**		**Edge**	**Middle**		**Edge**	**Middle**		**Edge**	**Middle**
A	**1150**	**1400**		**1025**	**1300**		**975**	**1225**		**950**	**1175**
B	**975**	**1200**		**875**	**1075**		**825**	**1025**		**800**	**1000**
C	**775**	**950**		**700**	**875**		**675**	**825**		**650**	**800**
D	**625**	**775**		**575**	**700**		**525**	**650**		**525**	**650**

Type of Interface 30°-60° Adjustable Tilt Leg
Roof Angle (Φ) – ≤10°

Wind Region	Building Height – H (m)										
	H≤5			5<H≤10			10<H≤15			15<H≤20	
	Edge	**Middle**		**Edge**	**Middle**		**Edge**	**Middle**		**Edge**	**Middle**
A	**1025**	**1275**		**925**	**1150**		**875**	**1100**		**850**	**1050**
B	**875**	**1075**		**775**	**975**		**750**	**925**		**725**	**900**
C	**700**	**875**		**625**	**775**		**600**	**750**		**575**	**725**
D	**550**	**700**		**500**	**625**		**475**	**600**		**475**	**575**

Approved - Planning Only
NOT FOR CONSTRUCTION

gamcorp
innovation in design and construction

Client: **Clenergy Australia** Job: **23939**
Project: **PV-eZRack® SolarRoof Interface spacing Table** Date: **Sep-12**
Address: **All around Australia**
Designed: **M.S** REV G

PV-eZRack® SolarRoof Frame spacing Table for Adjustable Reverse Tilt Leg

Type of Rail ER-R
Solar Panel Dimension 2mx1m
Terrain category 2

Type of Interface 30°-65° Adjustable Tilt Leg
Roof Angle (Φ) – ≤10°

Wind Region	Building Height – H (m)										
	H≤5			5<H≤10			10<H≤15			15<H≤20	
	Edge	**Middle**		**Edge**	**Middle**		**Edge**	**Middle**		**Edge**	**Middle**
A	**1025**	**1275**		**925**	**1150**		**875**	**1100**		**850**	**1050**
B	**875**	**1075**		**775**	**975**		**750**	**925**		**725**	**900**
C	**700**	**875**		**625**	**775**		**600**	**750**		**575**	**725**
D	**550**	**700**		**500**	**625**		**475**	**600**		**475**	**575**

Type of Interface 30°-65° Adjustable Tilt Leg
Roof Angle (Φ) – ≤20°

Wind Region	Building Height – H (m)										
	H≤5			5<H≤10			10<H≤15			15<H≤20	
	Edge	**Middle**		**Edge**	**Middle**		**Edge**	**Middle**		**Edge**	**Middle**
A	**1150**	**1400**		**1025**	**1300**		**975**	**1225**		**950**	**1175**
B	**950**	**1200**		**875**	**1075**		**825**	**1025**		**800**	**1000**
C	**775**	**950**		**700**	**875**		**675**	**825**		**650**	**800**
D	**625**	**775**		**575**	**700**		**525**	**650**		**525**	**650**

Type of Interface 30°-65° Adjustable Tilt Leg
Roof Angle (Φ) – ≤30°

Wind Region	Building Height – H (m)										
	H≤5			5<H≤10			10<H≤15			15<H≤20	
	Edge	**Middle**		**Edge**	**Middle**		**Edge**	**Middle**		**Edge**	**Middle**
A	**1475**	**1675**		**1400**	**1575**		**1350**	**1525**		**1300**	**1500**
B	**1325**	**1650**		**1200**	**1500**		**1125**	**1425**		**1100**	**1375**
C	**1050**	**1325**		**950**	**1200**		**900**	**1125**		**875**	**1100**
D	**850**	**1050**		**775**	**950**		**725**	**900**		**700**	**875**

Approved - Planning Only
NOT FOR CONSTRUCTION

gamcorp
innovation in design and construction

Client: **Clenergy Australia** Job: **23939**
Project: **PV-eZRack® SolarRoof Interface spacing Table** Date: **Sep-12**
Address: **All around Australia**
Designed: **M.S** REV G

General Notes

Note 1 Screws minimum embedment length into timber 35 mm

Note 2 Recommended screws

Metal Purlins/Battens	**Fasteners to use**
0.55 mm – 1.5 mm	M6-11 TPI RoofZips
1.9 mm	M6-11 TPI RoofZips OR 12g-14 TPI Teks screws
2.4 mm and Above	12g-24 TPI Teks screws
Wood purlins and Rafter	**Fasteners to use**
Pine and Hardwood (35mm embedment and above)	M6 (12g) with 10 TPI

Note 3 Above Spacing calculated based on 1.9mm steel purlin OR F17 Hardwood

For Wind region C & D spacing for Tin Roof can be reduced as follows,

Material	**Wind Region C**		**Wind Region D**	
	Middle	Edge	Middle	Edge
0.55 mm steel Batten	18%	54%	64%	45%
0.75 mm steel Batten	0%	24%	10%	43%
1.2 mm steel purlin	0%	0%	0%	25%
F7 pine timber	0%	0%	0%	13%

Note 4 ER-R-ST railing also can be used. Spacing need to be reduced as follows,

Material	**Region A**		**Region B**	
	Middle	Edge	Middle	Edge
Tile roof interface	7.0%	7.0%	7.0%	7.0%
Tin roof interface	7.0%	7.0%	7.0%	7.0%
Adjustable tilt leg	7.0%	7.0%	7.0%	7.0%

Note 5 Following components are satisfied to use according to AS1170.2011

Components	**Part Number**	**Description**
MT-base Rail	ER-R-MT2560	MT-Rail 2560 mm
Corrugated Adapter	ER-AD-C110	Adapter for corrugated iron roof
Tilt Legs	ER-TL-30	Tilt Legs Kit fixed 30° (front and back leg)
Hanger Bolt	ER-HB-200/WOMP	Hanger Bolt without mounting plate M10x200. Fixed to timber purlin only
Roof extender	ER-RE-200	Roof Hook Extender 200mm

Note 6 For adjustable tilting leg,
Maximum back leg angle to horizontal - 90°
Minimum back leg angle to horizontal - 30°

Note 7 Figure shows the building dimension (b,d & h)

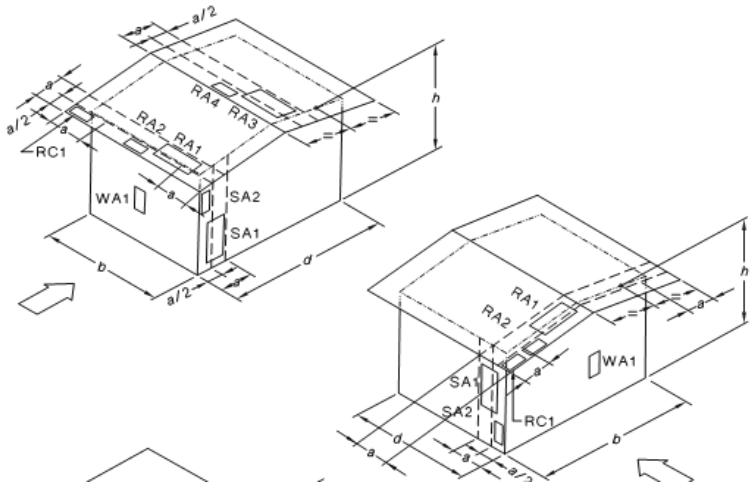

City of HOBART

Approved - Planning Only
NOT FOR CONSTRUCTION

F17/9271
BH:BH

2 February, 2017

MEMORANDUM: GENERAL MANAGER

LAND OWNER CONSENT FOR PLANNING APPLICATION HOBART TOWN HALL ANNEXE, 50 MACQUARIE STREET

The purpose of this memorandum is to recommend that land owner consent be granted to enable the lodgement of an Application for Planning Permit for a solar photovoltaic system at the Hobart Town Hall Annexe, 50 Macquarie Street.

Recommendation

That land owner consent be granted for the lodgement of a planning application for a solar photovoltaic system at the Hobart Town Hall Annexe and the attached landlord consent memo be signed.

(Bill Hanley)
BUILDING ASSET ENGINEER

Attachment: Landlord consent memo

Approved - Planning Only
NOT FOR CONSTRUCTION

Land owner consent for lodgement of a planning application for a solar photovoltaic system at the Hobart Town Hall Annexe, 50 Macquarie Street.

I, Nick Heath, being responsible for the administration of land making up 50 Macquarie Street, Hobart give permission in-principle for the lodgement of a planning application for a solar photovoltaic system at this address.

Date: 2/2/17

Signature:.....